QUIKTRIP STORE #0613

OLIVE BLVD. & GRAESER ROAD
CREVE COEUR, MISSOURI 63141

TRACTS IN U.S. SURVEY 1962 & SECTION 2, TOWNSHIP 45 NORTH, RANGE 5 EAST
ST. LOUIS COUNTY, MISSOURI.

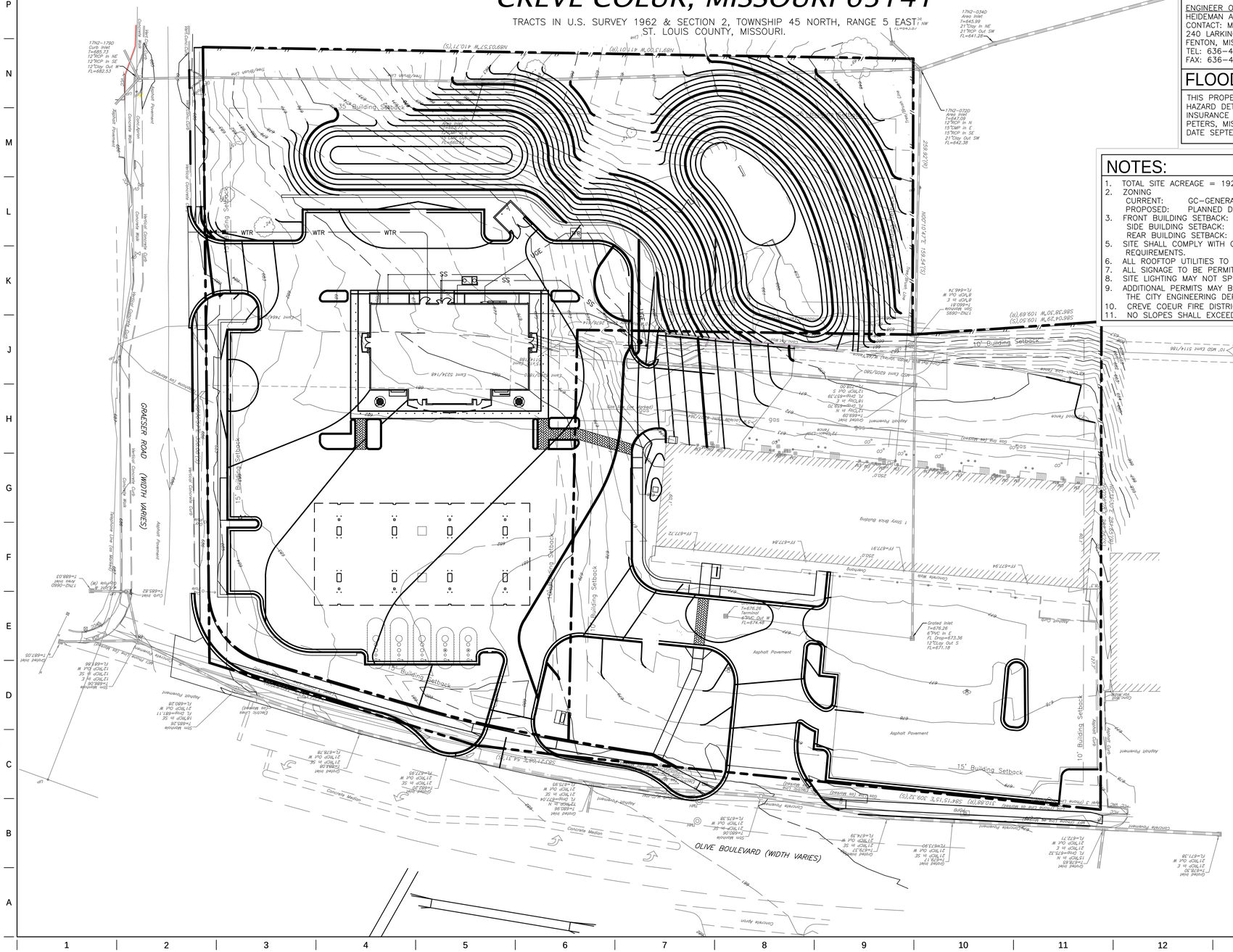
GRAESER ROAD (WIDTH VARIES)
OLIVE BOULEVARD (WIDTH VARIES)
35' Building Setback
15' Building Setback
10' Building Setback
Asphalt Pavement
Concrete Median
WTR
SS
N89°03'57"W 410.21'(S)
N89°13'00"W 411.01'(M)
N00°11'07"E 156.97'(S)
S89°46'53"E 41.17'(S)
S89°13'15"E 329.12'(S)
N00°46'07"E 256.97'(S)
N89°46'53"W 109.69'(S)
N89°13'15"W 109.69'(S)
S00°46'07"W 256.97'(S)
S89°13'15"E 110.68'(M)
S89°13'15"E 110.68'(S)
1 Story Brick Building
Grated Inlet
Area Inlet
Curb Inlet
Sign Manhole
Gas Manhole
Electric Line
Telephone Line
Fiber Optic Line
Gas Line (Buried)
Water Line
Sanitary Sewer
Storm Sewer
Concrete Walk
Concrete Curb
Asphalt Pavement
Concrete Pavement
Concrete Apron
Driveway
Landscape Area
Light Pole
Flag Pole
Bollard
Mailbox
Sign
Fire Hydrant
Water Valve
Gate Valve
Cleanout
Utility Pole
Guy Anchor
Transformer
Air Conditioner
Gas Meter
Electric Meter
Telephone Pedestal
Cable Pedestal
Trash Enclosure
Wheel Stop
Parking Stall
Handicap Stall
Curb Stop
Hydrant
Tree
Shrub
Bush
Fence
Retaining Wall
Boulder
Rock
Mulch
Sod
Seed
Erosion Control Blanket
Silt Fence
Construction Fence
Temporary Fence
Temporary Barrier
Temporary Sign
Temporary Light
Temporary Power Pole
Temporary Water Line
Temporary Sewer Line
Temporary Gas Line
Temporary Electric Line
Temporary Telephone Line
Temporary Fiber Optic Line
Temporary Cable Line
Temporary Gas Meter
Temporary Electric Meter
Temporary Telephone Pedestal
Temporary Cable Pedestal
Temporary Trash Enclosure
Temporary Wheel Stop
Temporary Parking Stall
Temporary Handicap Stall
Temporary Curb Stop
Temporary Hydrant
Temporary Tree
Temporary Shrub
Temporary Bush
Temporary Fence
Temporary Retaining Wall
Temporary Boulder
Temporary Rock
Temporary Mulch
Temporary Sod
Temporary Seed
Temporary Erosion Control Blanket
Temporary Silt Fence
Temporary Construction Fence
Temporary Temporary Fence
Temporary Temporary Barrier
Temporary Temporary Sign
Temporary Temporary Light
Temporary Temporary Power Pole
Temporary Temporary Water Line
Temporary Temporary Sewer Line
Temporary Temporary Gas Line
Temporary Temporary Electric Line
Temporary Temporary Telephone Line
Temporary Temporary Fiber Optic Line
Temporary Temporary Cable Line
Temporary Temporary Gas Meter
Temporary Temporary Electric Meter
Temporary Temporary Telephone Pedestal
Temporary Temporary Cable Pedestal
Temporary Temporary Trash Enclosure
Temporary Temporary Wheel Stop
Temporary Temporary Parking Stall
Temporary Temporary Handicap Stall
Temporary Temporary Curb Stop
Temporary Temporary Hydrant
Temporary Temporary Tree
Temporary Temporary Shrub
Temporary Temporary Bush
Temporary Temporary Fence
Temporary Temporary Retaining Wall
Temporary Temporary Boulder
Temporary Temporary Rock
Temporary Temporary Mulch
Temporary Temporary Sod
Temporary Temporary Seed
Temporary Temporary Erosion Control Blanket
Temporary Temporary Silt Fence
Temporary Temporary Construction Fence
Temporary Temporary Temporary Fence
Temporary Temporary Temporary Barrier
Temporary Temporary Temporary Sign
Temporary Temporary Temporary Light
Temporary Temporary Temporary Power Pole
Temporary Temporary Temporary Water Line
Temporary Temporary Temporary Sewer Line
Temporary Temporary Temporary Gas Line
Temporary Temporary Temporary Electric Line
Temporary Temporary Temporary Telephone Line
Temporary Temporary Temporary Fiber Optic Line
Temporary Temporary Temporary Cable Line
Temporary Temporary Temporary Gas Meter
Temporary Temporary Temporary Electric Meter
Temporary Temporary Temporary Telephone Pedestal
Temporary Temporary Temporary Cable Pedestal
Temporary Temporary Temporary Trash Enclosure
Temporary Temporary Temporary Wheel Stop
Temporary Temporary Temporary Parking Stall
Temporary Temporary Temporary Handicap Stall
Temporary Temporary Temporary Curb Stop
Temporary Temporary Temporary Hydrant
Temporary Temporary Temporary Tree
Temporary Temporary Temporary Shrub
Temporary Temporary Temporary Bush
Temporary Temporary Temporary Fence
Temporary Temporary Temporary Retaining Wall
Temporary Temporary Temporary Boulder
Temporary Temporary Temporary Rock
Temporary Temporary Temporary Mulch
Temporary Temporary Temporary Sod
Temporary Temporary Temporary Seed
Temporary Temporary Temporary Erosion Control Blanket
Temporary Temporary Temporary Silt Fence
Temporary Temporary Temporary Construction Fence
Temporary Temporary Temporary Temporary Fence
Temporary Temporary Temporary Temporary Barrier
Temporary Temporary Temporary Temporary Sign
Temporary Temporary Temporary Temporary Light
Temporary Temporary Temporary Temporary Power Pole
Temporary Temporary Temporary Temporary Water Line
Temporary Temporary Temporary Temporary Sewer Line
Temporary Temporary Temporary Temporary Gas Line
Temporary Temporary Temporary Temporary Electric Line
Temporary Temporary Temporary Temporary Telephone Line
Temporary Temporary Temporary Temporary Fiber Optic Line
Temporary Temporary Temporary Temporary Cable Line
Temporary Temporary Temporary Temporary Gas Meter
Temporary Temporary Temporary Temporary Electric Meter
Temporary Temporary Temporary Temporary Telephone Pedestal
Temporary Temporary Temporary Temporary Cable Pedestal
Temporary Temporary Temporary Temporary Trash Enclosure
Temporary Temporary Temporary Temporary Wheel Stop
Temporary Temporary Temporary Temporary Parking Stall
Temporary Temporary Temporary Temporary Handicap Stall
Temporary Temporary Temporary Temporary Curb Stop
Temporary Temporary Temporary Temporary Hydrant
Temporary Temporary Temporary Temporary Tree
Temporary Temporary Temporary Temporary Shrub
Temporary Temporary Temporary Temporary Bush
Temporary Temporary Temporary Temporary Fence
Temporary Temporary Temporary Temporary Retaining Wall
Temporary Temporary Temporary Temporary Boulder
Temporary Temporary Temporary Temporary Rock
Temporary Temporary Temporary Temporary Mulch
Temporary Temporary Temporary Temporary Sod
Temporary Temporary Temporary Temporary Seed
Temporary Temporary Temporary Temporary Erosion Control Blanket
Temporary Temporary Temporary Temporary Silt Fence
Temporary Temporary Temporary Temporary Construction Fence
Temporary Temporary Temporary Temporary Temporary Fence
Temporary Temporary Temporary Temporary Temporary Barrier
Temporary Temporary Temporary Temporary Temporary Sign
Temporary Temporary Temporary Temporary Temporary Light
Temporary Temporary Temporary Temporary Temporary Power Pole
Temporary Temporary Temporary Temporary Temporary Water Line
Temporary Temporary Temporary Temporary Temporary Sewer Line
Temporary Temporary Temporary Temporary Temporary Gas Line
Temporary Temporary Temporary Temporary Temporary Electric Line
Temporary Temporary Temporary Temporary Temporary Telephone Line
Temporary Temporary Temporary Temporary Temporary Fiber Optic Line
Temporary Temporary Temporary Temporary Temporary Cable Line
Temporary Temporary Temporary Temporary Temporary Gas Meter
Temporary Temporary Temporary Temporary Temporary Electric Meter
Temporary Temporary Temporary Temporary Temporary Telephone Pedestal
Temporary Temporary Temporary Temporary Temporary Cable Pedestal
Temporary Temporary Temporary Temporary Temporary Trash Enclosure
Temporary Temporary Temporary Temporary Temporary Wheel Stop
Temporary Temporary Temporary Temporary Temporary Parking Stall
Temporary Temporary Temporary Temporary Temporary Handicap Stall
Temporary Temporary Temporary Temporary Temporary Curb Stop
Temporary Temporary Temporary Temporary Temporary Hydrant
Temporary Temporary Temporary Temporary Temporary Tree
Temporary Temporary Temporary Temporary Temporary Shrub
Temporary Temporary Temporary Temporary Temporary Bush
Temporary Temporary Temporary Temporary Temporary Fence
Temporary Temporary Temporary Temporary Temporary Retaining Wall
Temporary Temporary Temporary Temporary Temporary Boulder
Temporary Temporary Temporary Temporary Temporary Rock
Temporary Temporary Temporary Temporary Temporary Mulch
Temporary Temporary Temporary Temporary Temporary Sod
Temporary Temporary Temporary Temporary Temporary Seed
Temporary Temporary Temporary Temporary Temporary Erosion Control Blanket
Temporary Temporary Temporary Temporary Temporary Silt Fence
Temporary Temporary Temporary Temporary Temporary Construction Fence
Temporary Temporary Temporary Temporary Temporary Temporary Fence
Temporary Temporary Temporary Temporary Temporary Temporary Barrier
Temporary Temporary Temporary Temporary Temporary Temporary Sign
Temporary Temporary Temporary Temporary Temporary Temporary Light
Temporary Temporary Temporary Temporary Temporary Temporary Power Pole
Temporary Temporary Temporary Temporary Temporary Temporary Water Line
Temporary Temporary Temporary Temporary Temporary Temporary Sewer Line
Temporary Temporary Temporary Temporary Temporary Temporary Gas Line
Temporary Temporary Temporary Temporary Temporary Temporary Electric Line
Temporary Temporary Temporary Temporary Temporary Temporary Telephone Line
Temporary Temporary Temporary Temporary Temporary Temporary Fiber Optic Line
Temporary Temporary Temporary Temporary Temporary Temporary Cable Line
Temporary Temporary Temporary Temporary Temporary Temporary Gas Meter
Temporary Temporary Temporary Temporary Temporary Temporary Electric Meter
Temporary Temporary Temporary Temporary Temporary Temporary Telephone Pedestal
Temporary Temporary Temporary Temporary Temporary Temporary Cable Pedestal
Temporary Temporary Temporary Temporary Temporary Temporary Trash Enclosure
Temporary Temporary Temporary Temporary Temporary Temporary Wheel Stop
Temporary Temporary Temporary Temporary Temporary Temporary Parking Stall
Temporary Temporary Temporary Temporary Temporary Temporary Handicap Stall
Temporary Temporary Temporary Temporary Temporary Temporary Curb Stop
Temporary Temporary Temporary Temporary Temporary Temporary Hydrant
Temporary Temporary Temporary Temporary Temporary Temporary Tree
Temporary Temporary Temporary Temporary Temporary Temporary Shrub
Temporary Temporary Temporary Temporary Temporary Temporary Bush
Temporary Temporary Temporary Temporary Temporary Temporary Fence
Temporary Temporary Temporary Temporary Temporary Temporary Retaining Wall
Temporary Temporary Temporary Temporary Temporary Temporary Boulder
Temporary Temporary Temporary Temporary Temporary Temporary Rock
Temporary Temporary Temporary Temporary Temporary Temporary Mulch
Temporary Temporary Temporary Temporary Temporary Temporary Sod
Temporary Temporary Temporary Temporary Temporary Temporary Seed
Temporary Temporary Temporary Temporary Temporary Temporary Erosion Control Blanket
Temporary Temporary Temporary Temporary Temporary Temporary Silt Fence
Temporary Temporary Temporary Temporary Temporary Temporary Construction Fence
Temporary Temporary Temporary Temporary Temporary Temporary Temporary Fence
Temporary Temporary Temporary Temporary Temporary Temporary Temporary Barrier
Temporary Temporary Temporary Temporary Temporary Temporary Temporary Sign
Temporary Temporary Temporary Temporary Temporary Temporary Temporary Light
Temporary Temporary Temporary Temporary Temporary Temporary Temporary Power Pole
Temporary Temporary Temporary Temporary Temporary Temporary Temporary Water Line
Temporary Temporary Temporary Temporary Temporary Temporary Temporary Sewer Line
Temporary Temporary Temporary Temporary Temporary Temporary Temporary Gas Line
Temporary Temporary Temporary Temporary Temporary Temporary Temporary Electric Line
Temporary Temporary Temporary Temporary Temporary Temporary Temporary Telephone Line
Temporary Temporary Temporary Temporary Temporary Temporary Temporary Fiber Optic Line
Temporary Temporary Temporary Temporary Temporary Temporary Temporary Cable Line
Temporary Temporary Temporary Temporary Temporary Temporary Temporary Gas Meter
Temporary Temporary Temporary Temporary Temporary Temporary Temporary Electric Meter
Temporary Temporary Temporary Temporary Temporary Temporary Temporary Telephone Pedestal
Temporary Temporary Temporary Temporary Temporary Temporary Temporary Cable Pedestal
Temporary Temporary Temporary Temporary Temporary Temporary Temporary Trash Enclosure
Temporary Temporary Temporary Temporary Temporary Temporary Temporary Wheel Stop
Temporary Temporary Temporary Temporary Temporary Temporary Temporary Parking Stall
Temporary Temporary Temporary Temporary Temporary Temporary Temporary Handicap Stall
Temporary Temporary Temporary Temporary Temporary Temporary Temporary Curb Stop
Temporary Temporary Temporary Temporary Temporary Temporary Temporary Hydrant
Temporary Temporary Temporary Temporary Temporary Temporary Temporary Tree
Temporary Temporary Temporary Temporary Temporary Temporary Temporary Shrub
Temporary Temporary Temporary Temporary Temporary Temporary Temporary Bush
Temporary Temporary Temporary Temporary Temporary Temporary Temporary Fence
Temporary Temporary Temporary Temporary Temporary Temporary Temporary Retaining Wall
Temporary Temporary Temporary Temporary Temporary Temporary Temporary Boulder
Temporary Temporary Temporary Temporary Temporary Temporary Temporary Rock
Temporary Temporary Temporary Temporary Temporary Temporary Temporary Mulch
Temporary Temporary Temporary Temporary Temporary Temporary Temporary Sod
Temporary Temporary Temporary Temporary Temporary Temporary Temporary Seed
Temporary Temporary Temporary Temporary Temporary Temporary Temporary Erosion Control Blanket
Temporary Temporary Temporary Temporary Temporary Temporary Temporary Silt Fence
Temporary Temporary Temporary Temporary Temporary Temporary Temporary Construction Fence
Temporary Temporary Temporary Temporary Temporary Temporary Temporary Temporary Fence
Temporary Temporary Temporary Temporary Temporary Temporary Temporary Temporary Barrier
Temporary Temporary Temporary Temporary Temporary Temporary Temporary Temporary Sign
Temporary Temporary Temporary Temporary Temporary Temporary Temporary Temporary Light
Temporary Temporary Temporary Temporary Temporary Temporary Temporary Temporary Power Pole
Temporary Temporary Temporary Temporary Temporary Temporary Temporary Temporary Water Line
Temporary Temporary Temporary Temporary Temporary Temporary Temporary Temporary Sewer Line
Temporary Temporary Temporary Temporary Temporary Temporary Temporary Temporary Gas Line
Temporary Temporary Temporary Temporary Temporary Temporary Temporary Temporary Electric Line
Temporary Temporary Temporary Temporary Temporary Temporary Temporary Temporary Telephone Line
Temporary Temporary Temporary Temporary Temporary Temporary Temporary Temporary Fiber Optic Line
Temporary Temporary Temporary Temporary Temporary Temporary Temporary Temporary Cable Line
Temporary Temporary Temporary Temporary Temporary Temporary Temporary Temporary Gas Meter
Temporary Temporary Temporary Temporary Temporary Temporary Temporary Temporary Electric Meter
Temporary Temporary Temporary Temporary Temporary Temporary Temporary Temporary Telephone Pedestal
Temporary Temporary Temporary Temporary Temporary Temporary Temporary Temporary Cable Pedestal
Temporary Temporary Temporary Temporary Temporary Temporary Temporary Temporary Trash Enclosure
Temporary Temporary Temporary Temporary Temporary Temporary Temporary Temporary Wheel Stop
Temporary Temporary Temporary Temporary Temporary Temporary Temporary Temporary Parking Stall
Temporary Temporary Temporary Temporary Temporary Temporary Temporary Temporary Handicap Stall
Temporary Temporary Temporary Temporary Temporary Temporary Temporary Temporary Curb Stop
Temporary Temporary Temporary Temporary Temporary Temporary Temporary Temporary Hydrant
Temporary Temporary Temporary Temporary Temporary Temporary Temporary Temporary Tree
Temporary Temporary Temporary Temporary Temporary Temporary Temporary Temporary Shrub
Temporary Temporary Temporary Temporary Temporary Temporary Temporary Temporary Bush
Temporary Temporary Temporary Temporary Temporary Temporary Temporary Temporary Fence
Temporary Temporary Temporary Temporary Temporary Temporary Temporary Temporary Retaining Wall
Temporary Temporary Temporary Temporary Temporary Temporary Temporary Temporary Boulder
Temporary Temporary Temporary Temporary Temporary Temporary Temporary Temporary Rock
Temporary Temporary Temporary Temporary Temporary Temporary Temporary Temporary Mulch
Temporary Temporary Temporary Temporary Temporary Temporary Temporary Temporary Sod
Temporary Temporary Temporary Temporary Temporary Temporary Temporary Temporary Seed
Temporary Temporary Temporary Temporary Temporary Temporary Temporary Temporary Erosion Control Blanket
Temporary Temporary Temporary Temporary Temporary Temporary Temporary Temporary Silt Fence
Temporary Temporary Temporary Temporary Temporary Temporary Temporary Temporary Construction Fence
Temporary Temporary Temporary Temporary Temporary Temporary Temporary Temporary Temporary Fence
Temporary Temporary Temporary Temporary Temporary Temporary Temporary Temporary Temporary Barrier
Temporary Temporary Temporary Temporary Temporary Temporary Temporary Temporary Temporary Sign
Temporary Temporary Temporary Temporary Temporary Temporary Temporary Temporary Temporary Light
Temporary Temporary Temporary Temporary Temporary Temporary Temporary Temporary Temporary Power Pole
Temporary Temporary Temporary Temporary Temporary Temporary Temporary Temporary Temporary Water Line
Temporary Temporary Temporary Temporary Temporary Temporary Temporary Temporary Temporary Sewer Line
Temporary Temporary Temporary Temporary Temporary Temporary Temporary Temporary Temporary Gas Line
Temporary Temporary Temporary Temporary Temporary Temporary Temporary Temporary Temporary Electric Line
Temporary Temporary Temporary Temporary Temporary Temporary Temporary Temporary Temporary Telephone Line
Temporary Temporary Temporary Temporary Temporary Temporary Temporary Temporary Temporary Fiber Optic Line
Temporary Temporary Temporary Temporary Temporary Temporary Temporary Temporary Temporary Cable Line
Temporary Temporary Temporary Temporary Temporary Temporary Temporary Temporary Temporary Gas Meter
Temporary Temporary Temporary Temporary Temporary Temporary Temporary Temporary Temporary Electric Meter
Temporary Temporary Temporary Temporary Temporary Temporary Temporary Temporary Temporary Telephone Pedestal
Temporary Temporary Temporary Temporary Temporary Temporary Temporary Temporary Temporary Cable Pedestal
Temporary Temporary Temporary Temporary Temporary Temporary Temporary Temporary Temporary Trash Enclosure
Temporary Temporary Temporary Temporary Temporary Temporary Temporary Temporary Temporary Wheel Stop
Temporary Temporary Temporary Temporary Temporary Temporary Temporary Temporary Temporary Parking Stall
Temporary Temporary Temporary Temporary Temporary Temporary Temporary Temporary Temporary Handicap Stall
Temporary Temporary Temporary Temporary Temporary Temporary Temporary Temporary Temporary Curb Stop
Temporary Temporary Temporary Temporary Temporary Temporary Temporary Temporary Temporary Hydrant
Temporary Temporary Temporary Temporary Temporary Temporary Temporary Temporary Temporary Tree
Temporary Temporary Temporary Temporary Temporary Temporary Temporary Temporary Temporary Shrub
Temporary Temporary Temporary Temporary Temporary Temporary Temporary Temporary Temporary Bush
Temporary Temporary Temporary Temporary Temporary Temporary Temporary Temporary Temporary Fence
Temporary Temporary Temporary Temporary Temporary Temporary Temporary Temporary Temporary Retaining Wall
Temporary Temporary Temporary Temporary Temporary Temporary Temporary Temporary Temporary Boulder
Temporary Temporary Temporary Temporary Temporary Temporary Temporary Temporary Temporary Rock
Temporary Temporary Temporary Temporary Temporary Temporary Temporary Temporary Temporary Mulch
Temporary Temporary Temporary Temporary Temporary Temporary Temporary Temporary Temporary Sod
Temporary Temporary Temporary Temporary Temporary Temporary Temporary Temporary Temporary Seed
Temporary Temporary Temporary Temporary Temporary Temporary Temporary Temporary Temporary Erosion Control Blanket
Temporary Temporary Temporary Temporary Temporary Temporary Temporary Temporary Temporary Silt Fence
Temporary Temporary Temporary Temporary Temporary Temporary Temporary Temporary Temporary Construction Fence
Temporary Temporary Temporary Temporary Temporary Temporary Temporary Temporary Temporary Temporary Fence
Temporary Temporary Temporary Temporary Temporary Temporary Temporary Temporary Temporary Temporary Barrier
Temporary Temporary Temporary Temporary Temporary Temporary Temporary Temporary Temporary Temporary Sign
Temporary Temporary Temporary Temporary Temporary Temporary Temporary Temporary Temporary Temporary Light
Temporary Temporary Temporary Temporary Temporary Temporary Temporary Temporary Temporary Temporary Power Pole
Temporary Temporary Temporary Temporary Temporary Temporary Temporary Temporary Temporary Temporary Water Line
Temporary Temporary Temporary Temporary Temporary Temporary Temporary Temporary Temporary Temporary Sewer Line
Temporary Temporary Temporary Temporary Temporary Temporary Temporary Temporary Temporary Temporary Gas Line
Temporary Temporary Temporary Temporary Temporary Temporary Temporary Temporary Temporary Temporary Electric Line
Temporary Temporary Temporary Temporary Temporary Temporary Temporary Temporary Temporary Temporary Telephone Line
Temporary Temporary Temporary Temporary Temporary Temporary Temporary Temporary Temporary Temporary Fiber Optic Line
Temporary Temporary Temporary Temporary Temporary Temporary Temporary Temporary Temporary Temporary Cable Line
Temporary Temporary Temporary Temporary Temporary Temporary Temporary Temporary Temporary Temporary Gas Meter
Temporary Temporary Temporary Temporary Temporary Temporary Temporary Temporary Temporary Temporary Electric Meter
Temporary Temporary Temporary Temporary Temporary Temporary Temporary Temporary Temporary Temporary Telephone Pedestal
Temporary Temporary Temporary Temporary Temporary Temporary Temporary Temporary Temporary Temporary Cable Pedestal
Temporary Temporary Temporary Temporary Temporary Temporary Temporary Temporary Temporary Temporary Trash Enclosure
Temporary Temporary Temporary Temporary Temporary Temporary Temporary Temporary Temporary Temporary Wheel Stop
Temporary Temporary Temporary Temporary Temporary Temporary Temporary Temporary Temporary Temporary Parking Stall
Temporary Temporary Temporary Temporary Temporary Temporary Temporary Temporary Temporary Temporary Handicap Stall
Temporary Temporary Temporary Temporary Temporary Temporary Temporary Temporary Temporary Temporary Curb Stop
Temporary Temporary Temporary Temporary Temporary Temporary Temporary Temporary Temporary Temporary Hydrant
Temporary Temporary Temporary Temporary Temporary Temporary Temporary Temporary Temporary Temporary Tree
Temporary Temporary Temporary Temporary Temporary Temporary Temporary Temporary Temporary Temporary Shrub
Temporary Temporary Temporary Temporary Temporary Temporary Temporary Temporary Temporary Temporary Bush
Temporary Temporary Temporary Temporary Temporary Temporary Temporary Temporary Temporary Temporary Fence
Temporary Temporary Temporary Temporary Temporary Temporary Temporary Temporary Temporary Temporary Retaining Wall
Temporary Temporary Temporary Temporary Temporary Temporary Temporary Temporary Temporary Temporary Boulder
Temporary Temporary Temporary Temporary Temporary Temporary Temporary Temporary Temporary Temporary Rock
Temporary Temporary Temporary Temporary Temporary Temporary Temporary Temporary Temporary Temporary Mulch
Temporary Temporary Temporary Temporary Temporary Temporary Temporary Temporary Temporary Temporary Sod
Temporary Temporary Temporary Temporary Temporary Temporary Temporary Temporary Temporary Temporary Seed
Temporary Temporary Temporary Temporary Temporary Temporary Temporary Temporary Temporary Temporary Erosion Control Blanket
Temporary Temporary Temporary Temporary Temporary Temporary Temporary Temporary Temporary Temporary Silt Fence
Temporary Temporary Temporary Temporary Temporary Temporary Temporary Temporary Temporary Temporary Construction Fence
Temporary Temporary Temporary Temporary Temporary Temporary Temporary Temporary Temporary Temporary Temporary Fence
Temporary Temporary Temporary Temporary Temporary Temporary Temporary Temporary Temporary Temporary Temporary Barrier
Temporary Temporary Temporary Temporary Temporary Temporary Temporary Temporary Temporary Temporary Temporary Sign
Temporary Temporary Temporary Temporary Temporary Temporary Temporary Temporary Temporary Temporary Temporary Light
Temporary Temporary Temporary Temporary Temporary Temporary Temporary Temporary Temporary Temporary Temporary Power Pole
Temporary Temporary Temporary Temporary Temporary Temporary Temporary Temporary Temporary Temporary Temporary Water Line
Temporary Temporary Temporary Temporary Temporary Temporary Temporary Temporary Temporary Temporary Temporary Sewer Line
Temporary Temporary Temporary Temporary Temporary Temporary Temporary Temporary Temporary Temporary Temporary Gas Line
Temporary Temporary Temporary Temporary Temporary Temporary Temporary Temporary Temporary Temporary Temporary Electric Line
Temporary Temporary Temporary Temporary Temporary Temporary Temporary Temporary Temporary Temporary Temporary Telephone Line
Temporary Temporary Temporary Temporary Temporary Temporary Temporary Temporary Temporary Temporary Temporary Fiber Optic Line
Temporary Temporary Temporary Temporary Temporary Temporary Temporary Temporary Temporary Temporary Temporary Cable Line
Temporary Temporary Temporary Temporary Temporary Temporary Temporary Temporary Temporary Temporary Temporary Gas Meter
Temporary Temporary Temporary Temporary Temporary Temporary Temporary Temporary Temporary Temporary Temporary Electric Meter
Temporary Temporary Temporary Temporary Temporary Temporary Temporary Temporary Temporary Temporary Temporary Telephone Pedestal
Temporary Temporary Temporary Temporary Temporary Temporary Temporary Temporary Temporary Temporary Temporary Cable Pedestal
Temporary Temporary Temporary Temporary Temporary Temporary Temporary Temporary Temporary Temporary Temporary Trash Enclosure
Temporary Temporary Temporary Temporary Temporary Temporary Temporary Temporary Temporary Temporary Temporary Wheel Stop
Temporary Temporary Temporary Temporary Temporary Temporary Temporary Temporary Temporary Temporary Temporary Parking Stall
Temporary Temporary Temporary Temporary Temporary Temporary Temporary Temporary Temporary Temporary Temporary Handicap Stall
Temporary Temporary Temporary Temporary Temporary Temporary Temporary Temporary Temporary Temporary Temporary Curb Stop
Temporary Temporary Temporary Temporary Temporary Temporary Temporary Temporary Temporary Temporary Temporary Hydrant
Temporary Temporary Temporary Temporary Temporary Temporary Temporary Temporary Temporary Temporary Temporary Tree
Temporary Temporary Temporary Temporary Temporary Temporary Temporary Temporary Temporary Temporary Temporary Shrub
Temporary Temporary Temporary Temporary Temporary Temporary Temporary Temporary Temporary Temporary Temporary Bush
Temporary Temporary Temporary Temporary Temporary Temporary Temporary Temporary Temporary Temporary Temporary Fence
Temporary Temporary Temporary Temporary Temporary Temporary Temporary Temporary Temporary Temporary Temporary Retaining Wall
Temporary Temporary Temporary Temporary Temporary Temporary Temporary Temporary Temporary Temporary Temporary Boulder
Temporary Temporary Temporary Temporary Temporary Temporary Temporary Temporary Temporary Temporary Temporary Rock
Temporary Temporary Temporary Temporary Temporary Temporary Temporary Temporary Temporary Temporary Temporary Mulch
Temporary Temporary Temporary Temporary Temporary Temporary Temporary Temporary Temporary Temporary Temporary Sod
Temporary Temporary Temporary Temporary Temporary Temporary Temporary Temporary Temporary Temporary Temporary Seed
Temporary Temporary Temporary Temporary Temporary Temporary Temporary Temporary Temporary Temporary Temporary Erosion Control Blanket
Temporary Temporary Temporary Temporary Temporary Temporary Temporary Temporary Temporary Temporary Temporary Silt Fence
Temporary Temporary Temporary Temporary Temporary Temporary Temporary Temporary Temporary Temporary Temporary Construction Fence
Temporary Temporary Temporary Temporary Temporary Temporary Temporary Temporary Temporary Temporary Temporary Temporary Fence
Temporary Temporary Temporary Temporary Temporary Temporary Temporary Temporary Temporary Temporary Temporary Temporary Barrier
Temporary Temporary Temporary Temporary Temporary Temporary Temporary Temporary Temporary Temporary Temporary Temporary Sign
Temporary Temporary Temporary Temporary Temporary Temporary Temporary Temporary Temporary Temporary Temporary Temporary Light
Temporary Temporary Temporary Temporary Temporary Temporary Temporary Temporary Temporary Temporary Temporary Temporary Power Pole
Temporary Temporary Temporary Temporary Temporary Temporary Temporary Temporary Temporary Temporary Temporary Temporary Water Line
Temporary Temporary Temporary Temporary Temporary Temporary Temporary Temporary Temporary Temporary Temporary Temporary Sewer Line
Temporary Temporary Temporary Temporary Temporary Temporary Temporary Temporary Temporary Temporary Temporary Temporary Gas Line
Temporary Temporary Temporary Temporary Temporary Temporary Temporary Temporary Temporary Temporary Temporary Temporary Electric Line
Temporary Temporary Temporary Temporary Temporary Temporary Temporary Temporary Temporary Temporary Temporary Temporary Telephone Line
Temporary Temporary Temporary Temporary Temporary Temporary Temporary Temporary Temporary Temporary Temporary Temporary Fiber Optic Line
Temporary Temporary Temporary Temporary Temporary Temporary Temporary Temporary Temporary Temporary Temporary Temporary Cable Line
Temporary Temporary Temporary Temporary Temporary Temporary Temporary Temporary Temporary Temporary Temporary Temporary Gas Meter
Temporary Temporary Temporary Temporary Temporary Temporary Temporary Temporary Temporary Temporary Temporary Temporary Electric Meter
Temporary Temporary Temporary Temporary Temporary Temporary Temporary Temporary Temporary Temporary Temporary Temporary Telephone Pedestal
Temporary Temporary Temporary Temporary Temporary Temporary Temporary Temporary Temporary Temporary Temporary Temporary Cable Pedestal
Temporary Temporary Temporary Temporary Temporary Temporary Temporary Temporary Temporary Temporary Temporary Temporary Trash Enclosure
Temporary Temporary Temporary Temporary Temporary Temporary Temporary Temporary Temporary Temporary Temporary Temporary Wheel Stop
Temporary Temporary Temporary Temporary Temporary Temporary Temporary Temporary Temporary Temporary Temporary Temporary Parking Stall
Temporary Temporary Temporary Temporary Temporary Temporary Temporary Temporary Temporary Temporary Temporary Temporary Handicap Stall
Temporary Temporary Temporary Temporary Temporary Temporary Temporary Temporary Temporary Temporary Temporary Temporary Curb Stop
Temporary Temporary Temporary Temporary Temporary Temporary Temporary Temporary Temporary Temporary Temporary Temporary Hydrant
Temporary Temporary Temporary Temporary Temporary Temporary Temporary Temporary Temporary Temporary Temporary Temporary Tree
Temporary Temporary Temporary Temporary Temporary Temporary Temporary Temporary Temporary Temporary Temporary Temporary Shrub
Temporary Temporary Temporary Temporary Temporary Temporary Temporary Temporary Temporary Temporary Temporary Temporary Bush
Temporary Temporary Temporary Temporary Temporary Temporary Temporary Temporary Temporary Temporary Temporary Temporary Fence
Temporary Temporary Temporary Temporary Temporary Temporary Temporary Temporary Temporary Temporary Temporary Temporary Retaining Wall
Temporary Temporary Temporary Temporary Temporary Temporary Temporary Temporary Temporary Temporary Temporary Temporary Boulder
Temporary Temporary Temporary Temporary Temporary Temporary Temporary Temporary Temporary Temporary Temporary Temporary Rock
Temporary Temporary Temporary Temporary Temporary Temporary Temporary Temporary Temporary Temporary Temporary Temporary Mulch
Temporary Temporary Temporary Temporary Temporary Temporary Temporary Temporary Temporary Temporary Temporary Temporary Sod
Temporary Temporary Temporary Temporary Temporary Temporary Temporary Temporary Temporary Temporary Temporary Temporary Seed
Temporary Temporary Temporary Temporary Temporary Temporary Temporary Temporary Temporary Temporary Temporary Temporary Erosion Control Blanket
Temporary Temporary Temporary Temporary Temporary Temporary Temporary Temporary Temporary Temporary Temporary Temporary Silt Fence
Temporary Temporary Temporary Temporary Temporary Temporary Temporary Temporary Temporary Temporary Temporary Temporary Construction Fence
Temporary Temporary Temporary Temporary Temporary Temporary Temporary Temporary Temporary Temporary Temporary Temporary Temporary Fence
Temporary Temporary Temporary Temporary Temporary Temporary Temporary Temporary Temporary Temporary Temporary Temporary Temporary Barrier
Temporary Temporary Temporary Temporary Temporary Temporary Temporary Temporary Temporary Temporary Temporary Temporary Temporary Sign
Temporary Temporary Temporary Temporary Temporary Temporary Temporary Temporary Temporary Temporary Temporary Temporary Temporary Light
Temporary Temporary Temporary Temporary Temporary Temporary Temporary Temporary Temporary Temporary Temporary Temporary Temporary Power Pole
Temporary Temporary Temporary Temporary Temporary Temporary Temporary Temporary Temporary Temporary Temporary Temporary Temporary Water Line
Temporary Temporary Temporary Temporary Temporary Temporary Temporary Temporary Temporary Temporary Temporary Temporary Temporary Sewer Line
Temporary Temporary Temporary Temporary Temporary Temporary Temporary Temporary Temporary Temporary Temporary Temporary Temporary Gas Line
Temporary Temporary Temporary Temporary Temporary Temporary Temporary Temporary Temporary Temporary Temporary Temporary Temporary Electric Line
Temporary Temporary Temporary Temporary Temporary Temporary Temporary Temporary Temporary Temporary Temporary Temporary Temporary Telephone Line
Temporary Temporary Temporary Temporary Temporary Temporary Temporary Temporary Temporary Temporary Temporary Temporary Temporary Fiber Optic Line
Temporary Temporary Temporary Temporary Temporary Temporary Temporary Temporary Temporary Temporary Temporary Temporary Temporary Cable Line
Temporary Temporary Temporary Temporary Temporary Temporary Temporary Temporary Temporary Temporary Temporary Temporary Temporary Gas Meter
Temporary Temporary Temporary Temporary Temporary Temporary Temporary Temporary Temporary Temporary Temporary Temporary Temporary Electric Meter
Temporary Temporary Temporary Temporary Temporary Temporary Temporary Temporary Temporary Temporary Temporary Temporary Temporary Telephone Pedestal
Temporary Temporary Temporary Temporary Temporary Temporary Temporary Temporary Temporary Temporary Temporary Temporary Temporary Cable Pedestal
Temporary Temporary Temporary Temporary Temporary Temporary Temporary Temporary Temporary Temporary Temporary Temporary Temporary Trash Enclosure
Temporary Temporary Temporary Temporary Temporary Temporary Temporary Temporary Temporary Temporary Temporary Temporary Temporary Wheel Stop
Temporary Temporary Temporary Temporary Temporary Temporary Temporary Temporary Temporary Temporary Temporary Temporary Temporary Parking Stall
Temporary Temporary Temporary Temporary Temporary Temporary Temporary Temporary Temporary Temporary Temporary Temporary Temporary Handicap Stall
Temporary Temporary Temporary Temporary Temporary Temporary Temporary Temporary Temporary Temporary Temporary Temporary Temporary Curb Stop
Temporary Temporary Temporary Temporary Temporary Temporary Temporary Temporary Temporary Temporary Temporary Temporary Temporary Hydrant
Temporary Temporary Temporary Temporary Temporary Temporary Temporary Temporary Temporary Temporary Temporary Temporary Temporary Tree
Temporary Temporary Temporary Temporary Temporary Temporary Temporary Temporary Temporary Temporary Temporary Temporary Temporary Shrub
Temporary Temporary Temporary Temporary Temporary Temporary Temporary Temporary Temporary Temporary Temporary Temporary Temporary Bush
Temporary Temporary Temporary Temporary Temporary Temporary Temporary Temporary Temporary Temporary Temporary Temporary Temporary Fence
Temporary Temporary Temporary Temporary Temporary Temporary Temporary Temporary Temporary Temporary Temporary Temporary Tempor

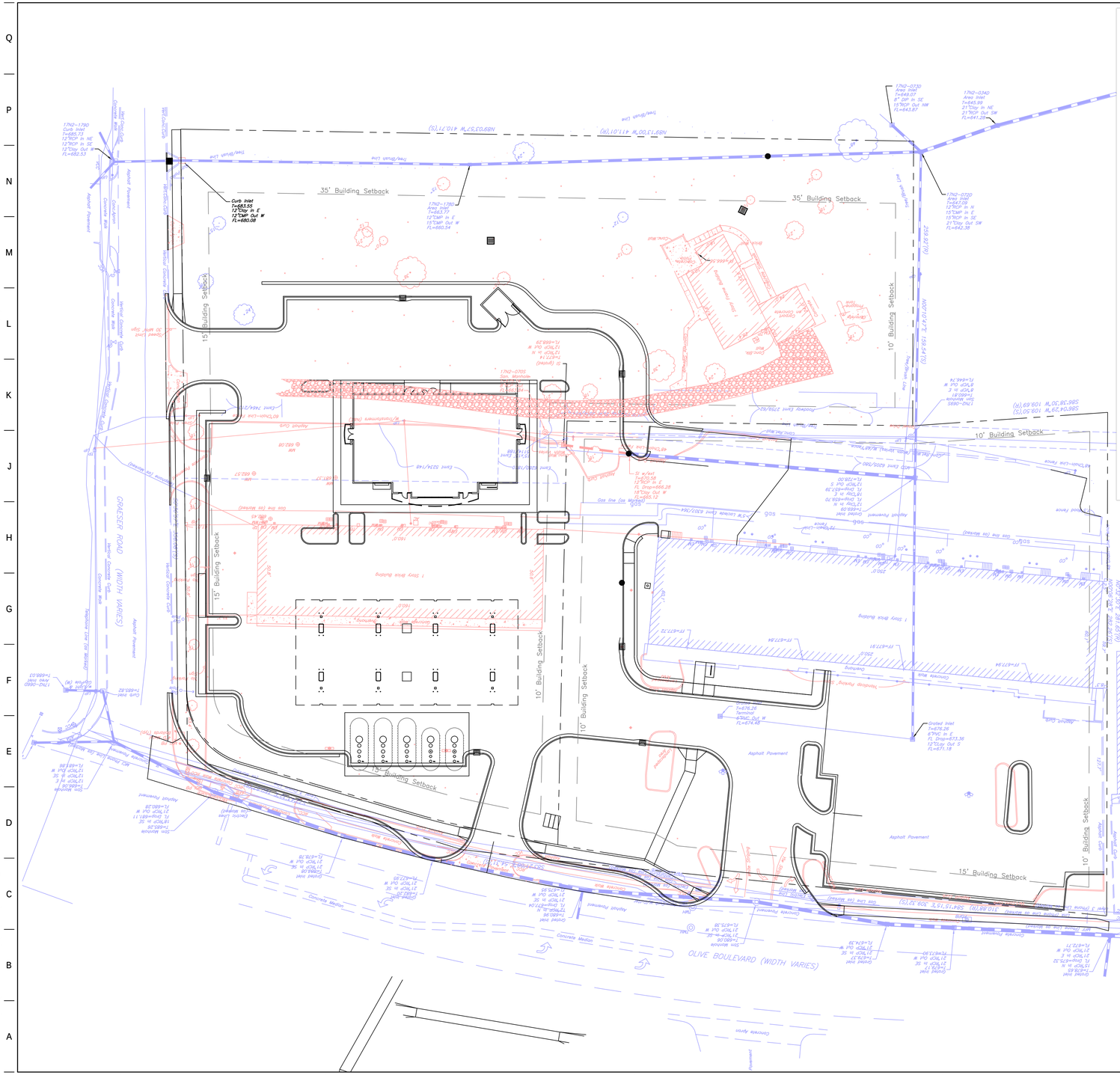

EXISTING LEGEND

- ohe — Overhead Electric
- uge — Underground Electric
- gas — Gas Line
- ss — Sanitary Sewer Line
- Storm Sewer Line
- ugt — Underground Telephone
- wtr — Water Line
- Utility Pedestal/Riser
- Utility Pole
- Utility Manhole
- Utility Meter
- Utility Valve
- CO — Utility Clean Out
- Guy Wire
- Light Pole
- Fire Hydrant
- Curb Inlet
- Grate Inlet
- Shrub
- Decidious Tree
- Single Post Sign
- Traffic Control Box
- Traffic Signal
- Handicapped Parking
- Bollard
- RD — Roof Drain
- Existing Structure
- Fence
- Traffic Signal Control Box/Pullbox
- Traffic Arrows
- Tree Line

EXISTING LEGEND (TO BE REMOVED)

- ohe — Overhead Electric
- uge — Underground Electric
- gas — Gas Line
- ss — Sanitary Sewer Line
- st — Storm Sewer Line
- ugt — Underground Telephone
- wtr — Water Line
- Utility Pedestal/Riser
- Utility Pole
- Utility Manhole
- Utility Meter
- Utility Valve
- CO — Utility Clean Out
- Guy Wire
- Light Pole
- Fire Hydrant
- Curb Inlet
- Grate Inlet
- Shrub
- Decidious Tree
- Single Post Sign
- Traffic Control Box
- Traffic Signal
- Handicapped Parking
- Bollard
- RD — Roof Drain
- Existing Structure
- Fence
- Traffic Signal Control Box/Pullbox
- Traffic Arrows
- Tree Line
- Concrete (Pavement & Sidewalk)
- Asphalt Pavement
- Gravel
- TBR — To Be Removed
- ATG — Adjust to Grade

MISCELLANEOUS DEMOLITION NOTES

1. ALL ITEMS IN BOLD ARE TO BE DEMOLISHED.
2. ALL TREES AND SHRUBS (EXCEPT THOSE SPECIFIED TO REMAIN) ON PROPERTY TO BE REMOVED.

N

30 15 0 30 60

PROJECT NO.:#######

QuikTrip No. 0613

OLIVE BLVD. & GREASER ROAD
CREVE COEUR, MO 63141

© COPYRIGHT QUIKTRIP CORPORATION 2011 ANY UNAUTHORIZED USE, REPRODUCTION, PUBLICATION, DISTRIBUTION, OR SALE IN WHOLE OR IN PART, IS STRICTLY FORBIDDEN.

PROTOTYPE: P-99 (08/01/19)
DIVISION:
VERSION: 001
DESIGNED BY: MJV
DRAWN BY: DPB
REVIEWED BY: MJV

REV	DATE	DESCRIPTION

ORIGINAL ISSUE DATE:

SHEET TITLE:
PRELIMINARY DEMOLITION PLAN

SHEET NUMBER:
2

FILE LOCATION:P:\Site\2385 – QuikTrip\Projects\R2385.01_Store 0613 – Creve Coeur\Drawings\Site Development Plans\06-0613 Civil.dwg TAB NAME:Demo (Prelim) USER:rncowan SAVED:5/7/2020 5:36 PM PLOTTED:5/8/2020 8:52 AM

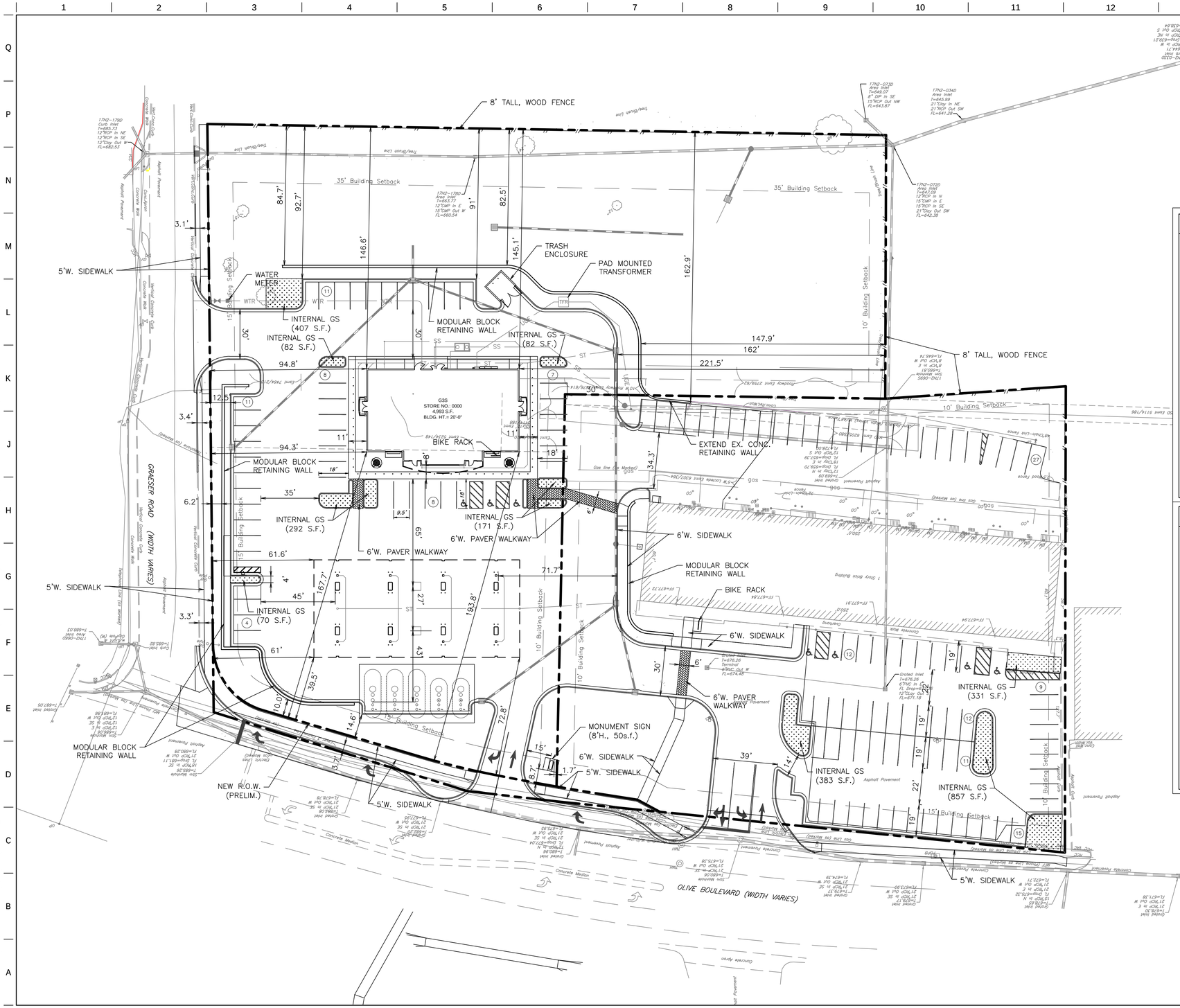

SITE LEGEND

- BOUNDARY LINE
- CONCRETE CURB AND GUTTER
- FENCE
- MOUNTABLE CURB W/RADIUS PROTECTOR
- PARKING SPACE INDICATOR
- AREA LIGHT
- MULTIPLE PRODUCT DISPENSER WITH CANOPY COLUMNS AND BOLLARDS
- TRANSFORMER
- FUEL SYSTEM ACCESS MANWAY

SITE DATA (QUIKTRIP STORE)

EXISTING ZONING:	GC – GENERAL COMMERCIAL
PROPOSED ZONING:	PLANNED DISTRICT
PROPOSED USE:	CONVENIENCE STORE W/ FUEL CANOPY
DEVELOPMENT AREA:	(113,256 S.F.) 2.60 AC
RIGHT-OF-WAY DEDICATION:	(2,500 S.F.) 0.06 AC
NET AREA:	(110,756 S.F.) 2.54 AC
PROPOSED SITE COVERAGE: (1.19 AC / 2.54 AC)	46.8%
FLOOR AREA RATIO: (4,993 S.F. / 110,756 S.F.)	0.05 FAR
BUILDING HEIGHT:	20'-0"
TOP OF BUILDING ELEVATION: (FFE=682.0 + 20'-0")	702.0
SITE LIGHTING:	(SEE PHOTOMETRIC SITE PLAN)
SITE LANDSCAPING:	(SEE LANDSCAPING PLAN)

INTERNAL GREENSPACE CALCULATIONS:
REQUIRED INTERNAL GREENSPACE = 1,015 S.F.
(PARKING & DRIVES = 35,536 S.F. / 350 S.F. x 10
PROVIDED INTERNAL GREENSPACE = 1,104 S.F.

STORM WATER MANAGEMENT:	(PER M.S.D. REGULATIONS)
PROPOSED PARKING: (INCLUDES 2 STANDARD & 1 VAN ACCESSIBLE SPACES)	= 49 SPACES

SITE DATA (RETAIL CENTER)

EXISTING ZONING:	GC – GENERAL COMMERCIAL
PROPOSED ZONING:	PLANNED DISTRICT
PROPOSED USE:	RETAIL
DEVELOPMENT AREA:	(79,892 S.F.) 1.83 AC
RIGHT-OF-WAY DEDICATION:	(402 S.F.) 0.01 AC
NET AREA:	(79,490 S.F.) 1.82 AC
PROPOSED SITE COVERAGE: (1.50 AC / 1.82 AC)	82.4%
EXISTING FLOOR AREA RATIO: (15,054 S.F. / 79,490 S.F.)	0.19 FAR
EXISITNG BUILDING HEIGHT:	17'-0"
TOP OF BUILDING ELEVATION: (FFE=677.9 + 17'-0")	694.9
SITE LIGHTING:	(SEE PHOTOMETRIC SITE PLAN)
SITE LANDSCAPING:	(SEE LANDSCAPING PLAN)

INTERNAL GREENSPACE CALCULATIONS:
REQUIRED INTERNAL GREENSPACE = 1,226 S.F.
(PARKING & DRIVES = 42,903 S.F. / 350 S.F. x 10
PROVIDED INTERNAL GREENSPACE = 1,571 S.F.

STORM WATER MANAGEMENT:	(PER M.S.D. REGULATIONS)
PROPOSED PARKING: (INCLUDES 3 STANDARD & 1 VAN ACCESSIBLE SPACES)	= 86 SPACES

30 15 0 30 60

PROJECT NO.:#######

QuikTrip No. 0613

OLIVE BLVD. & GREASER ROAD
CREVE COEUR, MO 63141

© COPYRIGHT QUIKTRIP CORPORATION 2011 ANY UNAUTHORIZED USE, REPRODUCTION, PUBLICATION, DISTRIBUTION, OR SALE IN WHOLE OR IN PART, IS STRICTLY FORBIDDEN.

PROTOTYPE: P-99 (08/01/19)
DIVISION:
VERSION: 001
DESIGNED BY: MJV
DRAWN BY: DPB
REVIEWED BY: MJV

REV	DATE	DESCRIPTION

ORIGINAL ISSUE DATE:

SHEET TITLE:
PRELIMINARY SITE PLAN

SHEET NUMBER:
3

FILE LOCATION:P:\Site\2385 – QuikTrip\Projects\R2385.01_Store 0613 – Creve Coeur\Drawings\Site Development Plans\06-0613 Civil.dwg TAB NAME:Site (Prelim) USER:ncowan SAVED:5/8/2020 9:26 AM PLOTTED:5/8/2020 9:26 AM

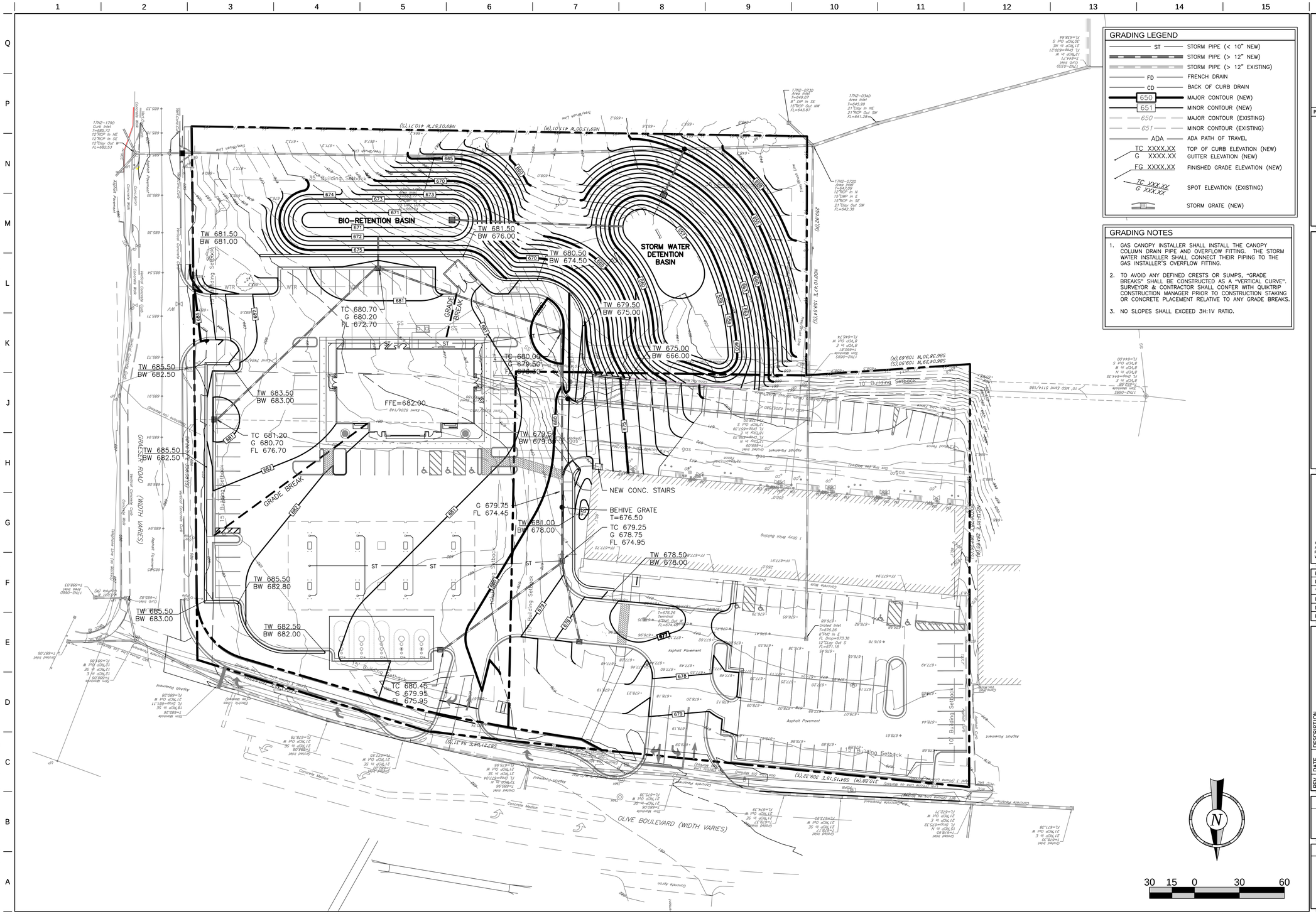

GRADING LEGEND

ST	STORM PIPE (< 10" NEW)
	STORM PIPE (> 12" NEW)
	STORM PIPE (> 12" EXISTING)
FD	FRENCH DRAIN
CD	BACK OF CURB DRAIN
650	MAJOR CONTOUR (NEW)
651	MINOR CONTOUR (NEW)
650	MAJOR CONTOUR (EXISTING)
651	MINOR CONTOUR (EXISTING)
ADA	ADA PATH OF TRAVEL
TC XXXX.XX / G XXXX.XX	TOP OF CURB ELEVATION (NEW) / GUTTER ELEVATION (NEW)
FG XXXX.XX	FINISHED GRADE ELEVATION (NEW)
TC XXX.XX / G XXX.XX	SPOT ELEVATION (EXISTING)
	STORM GRATE (NEW)

GRADING NOTES

1. GAS CANOPY INSTALLER SHALL INSTALL THE CANOPY COLUMN DRAIN PIPE AND OVERFLOW FITTING. THE STORM WATER INSTALLER SHALL CONNECT THEIR PIPING TO THE GAS INSTALLER'S OVERFLOW FITTING.
2. TO AVOID ANY DEFINED CRESTS OR SUMPS, "GRADE BREAKS" SHALL BE CONSTRUCTED AS A "VERTICAL CURVE". SURVEYOR & CONTRACTOR SHALL CONFER WITH QUIKTRIP CONSTRUCTION MANAGER PRIOR TO CONSTRUCTION STAKING OR CONCRETE PLACEMENT RELATIVE TO ANY GRADE BREAKS.
3. NO SLOPES SHALL EXCEED 3H:1V RATIO.

PROJECT NO.: #######

QuikTrip No. 0613

OLIVE BLVD. & GREASER ROAD
CREVE COEUR, MO 63141

© COPYRIGHT QUIKTRIP CORPORATION 2011
ANY UNAUTHORIZED USE, REPRODUCTION, PUBLICATION, DISTRIBUTION, OR SALE IN WHOLE OR IN PART, IS STRICTLY FORBIDDEN.

PROTOTYPE: P-99 (08/01/19)
DIVISION:
VERSION: 001
DESIGNED BY: MJV
DRAWN BY: DPB
REVIEWED BY: MJV

REV	DATE	DESCRIPTION

ORIGINAL ISSUE DATE:

SHEET TITLE:
PRELIMINARY GRADING PLAN

SHEET NUMBER:
4

FILE LOCATION:P:\Site\2385 - QuikTrip\Projects\R2385.01_Store 0613 - Creve Coeur\Drawings\Site Development Plans\06-0613 Civil.dwg TAB NAME:Grading (Prelim) USER:ncowen SAVED:5/8/2020 9:22 AM PLOTTED:5/8/2020 9:23 AM

FOR 8' OR TALLER FENCE, REPLACE 4X4 POST WITH 4X6 (NARROW SIDE TO FENCE). A 4TH "NAILER" WILL BE REQUIRED. BURIAL DEPTH SHALL BE 4'-0".

COVER ENTIRE FENCE W/BEHR DECK PLUS DP359 OXFORD BROWN (2 COATS MINIMUM). TOP AND BOTTOM OF FENCE ALSO TO BE SEALED.

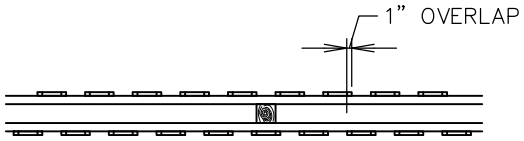

PLAN

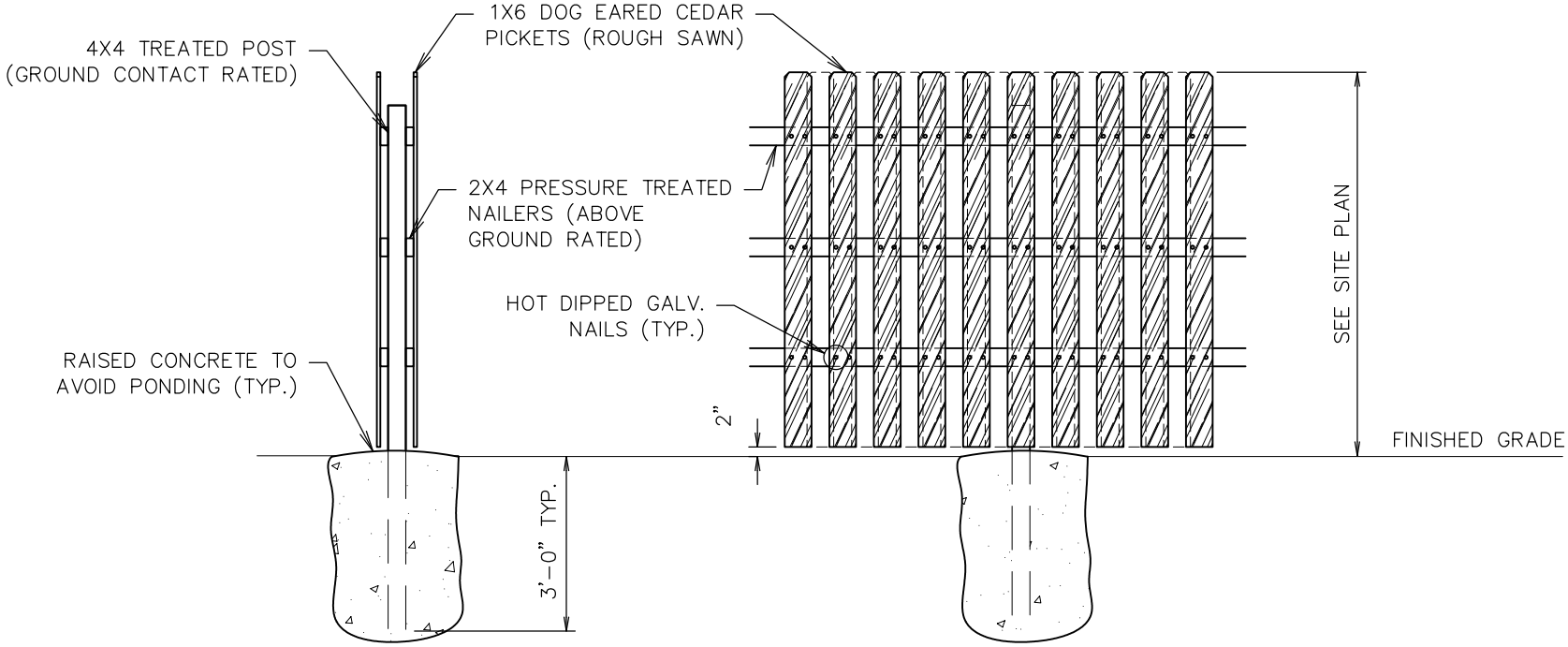

SIDE ELEVATION

FRONT ELEVATION

DOUBLE-SIDED WOODEN FENCE

QT	STORE NO.: 0613	NAME:	REVISION:	TITLE:
	DATE: 3/16/20			EF-X
	DRAWN BY: AMG			

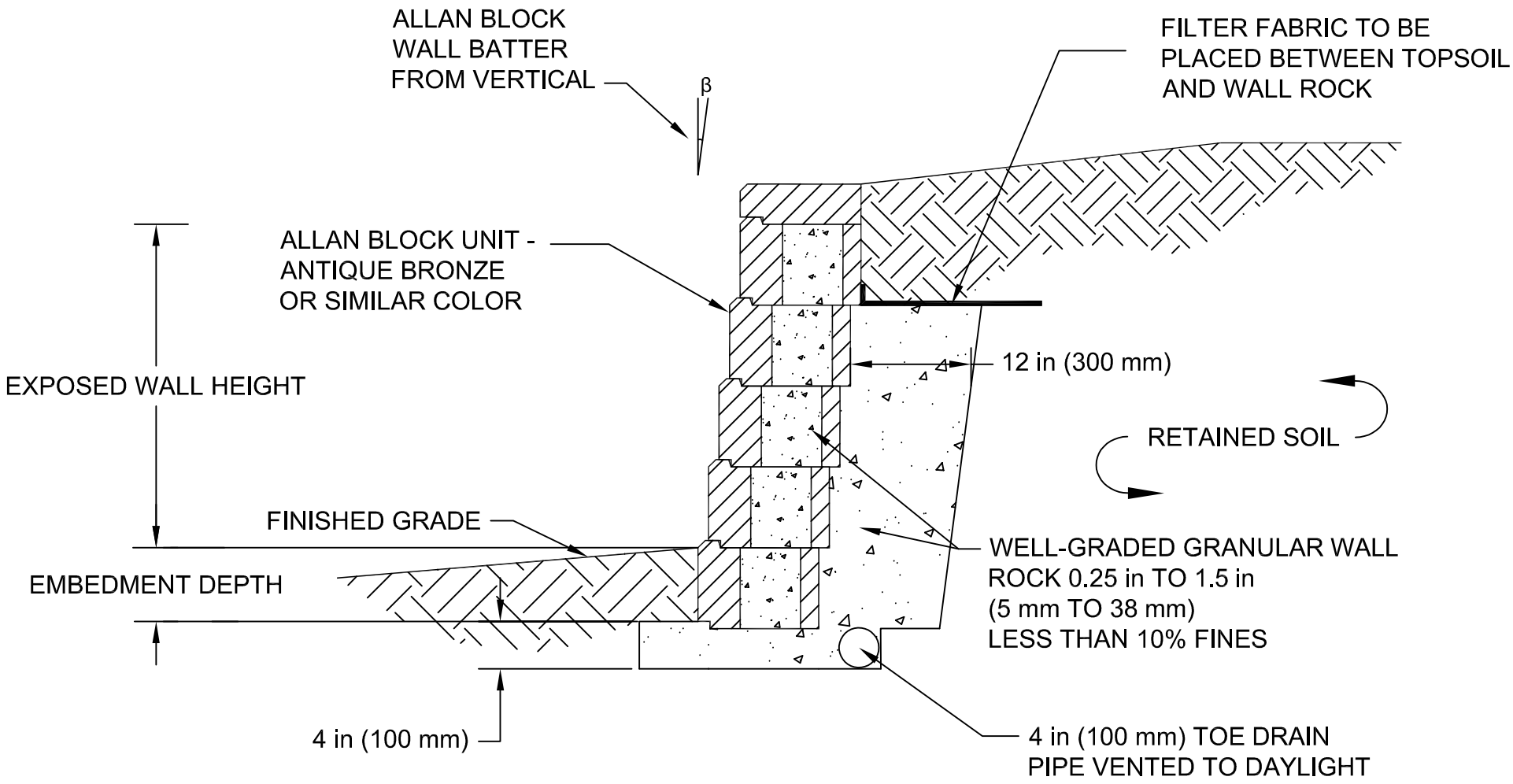

Designed By:	Title: TYPICAL GRAVITY WALL SECTION		Date:
Checked By:	ALLAN BLOCK	The purpose of this drawing is for preliminary design only. This drawing should not be used for final design or construction without the certification of a professional engineer registered in the state in which the wall will be built. The accuracy and use of details contained in this document are the sole responsibility of the user. The user must verify each detail for accuracy as they pertain to their particular project.	Project No:
Scale: NOT TO SCALE		© 2005 Allan Block	Drawing No: